# PPR

***Robust valve control device giving a confidence in reliable performance and outstanding durability under harsh working environments***

## Features

- Easy maintenance
- Precise calibration with simple SPAN and ZERO adjustments
- Simple conversion to direct acting or reverse acting
- 1/2 split range available
- Rugged aluminum housing with corrosion-resistant coating
- Vibration resistant design
- Stainless steel gauges standard
- Restricted pilot valve orifice kit for small actuators included

## Options

- Position transmitter (4-20mA output signal)
- 2 x SPDT limit switch
- 2 x P&F proximity sensor NJ2-V3-N
- Visual dome indicator
- High temperature

## Specifications

| | PPR | |
|---|---|---|
| | Rotary Type (Cam Feedback) | |
| | Single | Double |
| Input Signal | 0.2 - 1.0 bar (3 - 15 psi) (Note.1, 2) | |
| Supply Air Pressure | Max. 7.0 bar (100 psi) | |
| Standard Stroke | 60 - 100° (Note.3) | |
| Pneumatic Connections | PT(Rc) 1/4 or NPT 1/4 | |
| Ambient Temperature | -20 ~ +70℃ (Note. 4) | |
| Pressure Gauge | Stainless steel | |
| Output Characteristics | Linear | |
| Linearity | Within ± 1.0 % F.S | Within ± 1.5 % F.S |
| Sensitivity | Within ± 0.5 % F.S | |
| Hysteresis | Within 1.0 % F.S | |
| Repeatability | Within ± 0.5 % F.S | |
| Air Consumption | 5 LPM (Sup. 1.4 bar) | |
| Flow Capacity | 80 LPM (Sup. 1.4 bar) | |
| Body Material | Aluminium die-cast | |
| Weight | 2.5 kg | |

**With Dome Indicator**

Note : 1) 1/2 spilt range is available for 3~9 psi input signal or 9~15 psi input signal
2) Please contact for 6~30 psi input signal
3) Operating angle can be adjusted to 0~60° or 0~100°
4) High temperature option : up to +120℃ without feedback options
up to +85℃ with feedback options

## How to Order

| PPR – | Feedback Lever | Pressure Gauge | Pilot Valve Orifice | Position Feedback | Connection Threads | Dome Indicator | Operating Temperature | Mounting Bracket |
|---|---|---|---|---|---|---|---|---|

| Description | Code |
|---|---|
| **Feedback Shaft :** | N : NAMUR shaft (direct mounting)<br>A : Fork lever M6 x 40L<br>B : Fork lever other size on request |
| **Pressure Gauge :** | 1 : 6 bar (90psi)<br>2 : 10 bar (150psi) |
| **Pilot Valve Orifice :** | S : Standard<br>(Actuator volume over 180㎤)<br>M: Small orifice (Φ1.0 or Φ0.7)<br>(Actuator volume 90 ~ 180㎤) |
| **Position Feedback :** | N : None (standard)<br>O : Position transmitter<br>(4 ~ 20mA output signal)<br>L : 2 x SPDT limit switch<br>P : 2 x proximity sensor P&F NJ2-V3-N<br>M: O + L<br>Q: O + P |

| Description | Code |
|---|---|
| **Connection Threads :** (pneumatic) | 3 : PT(Rc) 1/4<br>4 : NPT 1/4 |
| **Dome Indicaotr :** | N : Flat indicator (standard)<br>D : Dome indicator |
| **Operating Temperature :** | T : 70℃ (standard)<br>H : 120℃ (without position feedback option)<br>85℃ (with position feedback option)<br>L : - 40℃ (without position feedback option) |
| **Mounting Bracket**<br>**- NAMUR Shaft Type :** | N : None<br>R : Multi-size NAMUR bracket<br>for DIN VDI/VDE 3845<br>(130 x 30 x 50 bracket on request) |
| **- Fork Lever Type** | F : DHCT bracket 80x30<br>for fork lever type<br>E : Multi-size NAMUR bracket<br>for Fork lever type<br>(130 x 30 x 50 bracket on request) |

## Dimensions

A. With Flat Indicator

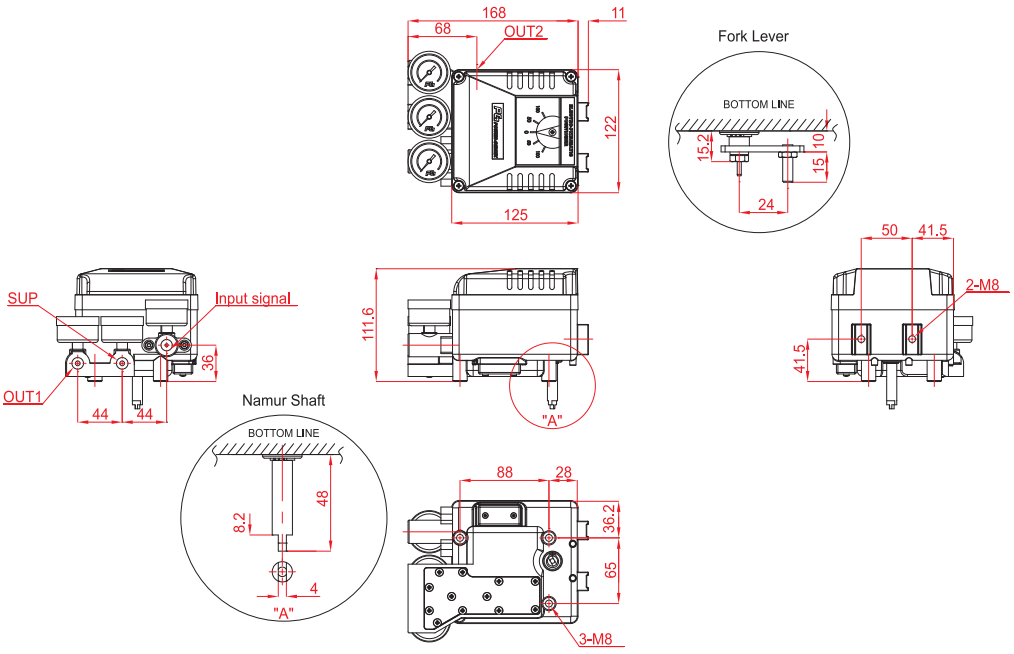


B. With Dome Indicator

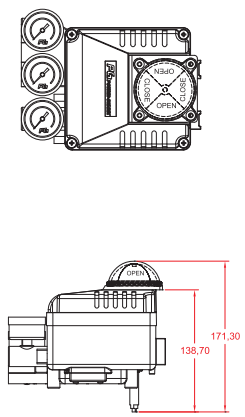




POWER-GENEX®
LYNSA Soluciones Industriales
www.lynsa.com